LUMINIS®

HCE1910
HOLLOWCORE ELEMENT
CEILING

PROJECT NAME: **QUANTITY:** **TYPE:**

ORDERING CODE:

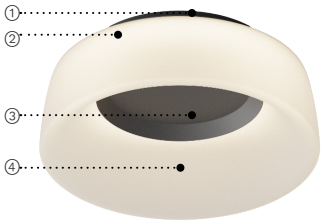

① Aluminum spun ceiling canopy allows easy installation. Discrete stainless-steel hardware.

② Die-cast aluminum housing for optimal heat dissipation. Housing with internally sealed driver. High performance LED array provides high lumen output with great visual comfort.

③ Fixture color painted core highlighting the seamless illumination and providing a cohesive design.

④ Semi opaque polyethylene lens providing high levels of ingress protection and shock resistance. Luminaire delivering a uniform illumination across the entire lens, elegantly highlighting its curved surfaces.

HCE1910

MATERIALS

Hollowcore Element's main housing is made of aluminum alloy to ensures optimal heat dissipation. The lens is made of polyethylene which seals the LED light module and offers a wide beam spread that is comfortable to look at.

ELECTRICAL DRIVER

Driver is 0-10V dimming-ready (dims to 1%) with: 120-277 multi-volt (50-60Hz) or 347-480 high-volt (50-60Hz), operating temperature range of -40ºC/-40ºF to 50ºC/122ºF, output over voltage protection, output over current protection and output short circuit protection with auto-recovery.

LED LIGHT ENGINE

Offered in 2700K, 3000K, 3500K & 4000K CCT / 90 CRI.
70% LED lumen maintenance at 60,000 hours (L70/B50) based on IESNA LM-80-08 LED extrapolated life, calculated per IESNA TM-21-21.

FINISH

Five-stage preparation process including preheating of cast aluminum parts for air extraction, and an environmentally friendly alloy sealant. Polyester powder coating is applied through an electrostatic process and oven cured for long term finish.

CERTIFICATION

UL Certified to Canadian and U.S. safety standards. Certified for use in wet locations. Photometric testing performed by an independent laboratory in accordance with IES LM-79-08 standards at 25°C. Actual performance may differ as a result of end-user environment and application.

WARRANTY

5-year limited warranty. This is the only warranty provided and no other statements in this specification sheet create any warranty of any kind. All other express and implied warranties are disclaimed. Complete warranty terms located at: https://www.acuitybrands.com/support/warranty/terms-and-conditions

MOUNTING

The mounting plate is designed to fit on a 4" (102mm) octagonal electrical box using 3.5" (89mm) C/C mounting holes. 4 additional holes for 5/16" hardware available in a 5" (127mm) square pattern. Fixture must be installed on a finished ceiling for exterior applications and/or when exposed to inclement weather.

MEASUREMENTS

Maximum weight: 11.24 lbs (5.1 kg)

LUMINIS.COM
Toll free: (866) 586-4647 | Fax: (514) 683-8872 | Email: info@luminis.com
260 Labrosse, Pointe-Claire (QC) Canada H9R 5L5

© 2026 Acuity Brands Lighting, Inc. All rights reserved. Specifications subject to change without notice.

ORDERING CODE

*SERIES	*LIGHT OUTPUT	*CCT	*VOLTAGE	*CONTROLS	SURGE PROTECTOR
HCE1910	**L4L35** 3241 lm / 23w **L4L45** 4584 lm / 34w **L4L65** 6332 lm / 48w **L4L75** 7696 lm / 60w **L4L95** 9690 lm / 79w **Delivered lumens calculated at 4000K/90CRI. Typical power consumption. Refer to LCF table for outputs at other CCTs.**	**27K** 2700K **30K** 3000K **35K** 3500K **40K** 4000K	**120** 120V **277** 277V **347** 347V **MVOLT** 120V-277V **HVOLT** 347V-480V	**ZT** 0-10V dimming (standard). Dims to 1%	**SP** 10kV surge protector

EMERGENCY	*FINISH	ENVIRONMENT
REM7 Remote emergency battery, 90 min, 7W[1]	**BKT** Jet black **BZT** Bronze **CHT** Champagne **CNT** Corten **DGT** Gun metal **GRT** Titanium gray **MST** Matte silver **SGT** Steel gray **WHT** Snow white **CMC** Custom matched color[2] **RAL** RAL color[3]	**MG** Marine grade paint[4] **NT** Natatorium suitable[5]

NOTES
*- Denotes a required field
1- Remote mount 50ft - 12" (305mm) square enclosure with access cover. Not available HVOLT. The remote enclosure must be interior.
2- Contact factory to coordinate custom matching color.
3- Specify RAL number.
4- Marine grade paint for harsh, coastal environment and exposure to salt water. Additional delay required.
5- Available only in WHT and BKT.

© 2026 Acuity Brands Lighting, Inc. All rights reserved. Specifications subject to change without notice.

TYPICAL PHOTOMETRY SUMMARY

HCE1910-L4L95

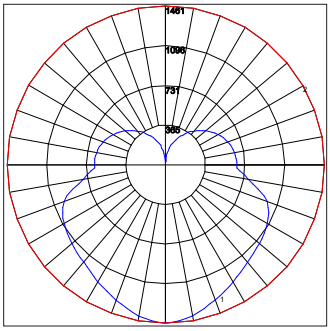

Total Lms: 9690 Lumens
Total Input Watts: 79.1 W
Efficacy: 123 Lumens/Watt
BUG: B2-U5-G3
CCT/CRI: 4000K/90
Maximum Candela: 1461 @ 0°
Spacing Criterion: 1.30

LUMEN CONVERSION FACTOR (LCF)		
CCT	CRI	LCF
2700K	90	0.93
3000K	90	0.97
3500K	90	0.99
4000K	90	1.00

All Photometry shown use the 90CRI 4000K LEDs.
Please visit our web site www.luminis.com for complete I.E.S. file.

© 2026 Acuity Brands Lighting, Inc. All rights reserved. Specifications subject to change without notice.

OPTION DETAILS

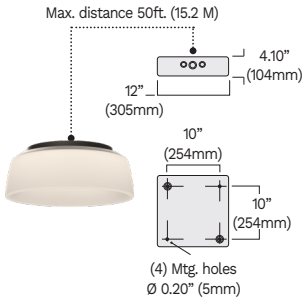

REM7
Remote mount 120/277V emergency battery pack (1110 lm/90 min). Test switch provided within enclosure with 5” (127mm) leads.

MOUNTING DETAILS

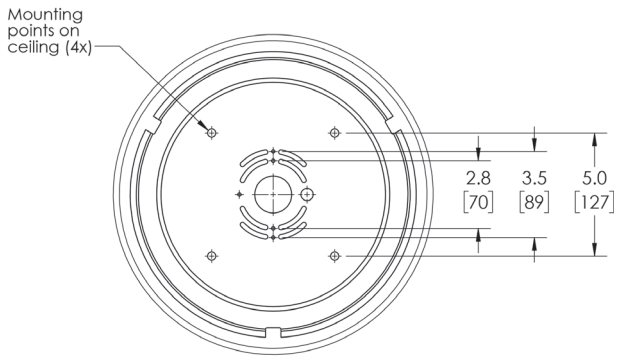

© 2026 Acuity Brands Lighting, Inc. All rights reserved. Specifications subject to change without notice.